Compact hydraulic power pack type MP and MPN

Compact hydraulic power packs are a type of hydraulic power pack. They are characterised by a highly compact design, since the motor shaft of the electric motor also acts as the pump shaft.
The ready-for-connection compact hydraulic power pack type MP, MPW, MPN and MPNW includes an electric motor which runs in oil.The stator is securely attached to the housing (tank). The compact hydraulic power pack is suitable for hydraulic systems with operating mode S2, S3 or S6.The heat is dissipated via surface convection so that no external cooler is usually necessary.Type MP and MPN includes a 3-phase motor, while type MPW and MPNW includes a single-phase-motor. Different tank sizes enable different usable oil quantities. Either single-circuit systems or dual-circuit systems can be selected. A radial piston pump, external gear pump or internal gear pump can be used as a hydraulic pump.
The compact hydraulic power pack type MP, MPW, MPN and MPNW is suitable as a highly compact control system, since connection blocks and valve banks can be directly mounted.

Nomen-clature:	**Radial piston and/or gear pump with integrated motor single or dual circuit pump**
Design:	**Oil immersed hydraulic power pack for intermittent or load/no load operation (S2-/S3-/S6-service)**
p_{max}:	**Radial piston pump 700 bar (high pressure) Gear pump 220 bar (low pressure)**
Q_{max}:	**13.1 lpm (high pressure) (V_g = 10.7 cm³/rev) 83 lpm (low pressure) (V_g = 61 cm³/rev)**
$V_{t\ max}$:	**approx. 100 lpm**

Features and benefits:

- Intermittent or load/no load operation S3 or S6
- Long lifetime and excellent reliability achieved by using radial piston pumps
- Low oil fill volumes make it environmentally sound thanks to small amount of oil to be disposed of and low costs for hydraulic fluid
- Two-stage valves and switch units for press controls can be directly mounted
- Co-ordinated range of valves and accessories from modular system
- Dual-circuit pumps available

Intended applications:

- Brake and rotor adjustment modules on wind turbines
- Counterbalance as well as machine tools
- Presses and other shaping machines
- Handling and clamping systems on machine tools and jigs
- Lubrication systems

Design and order coding example

MPN 44	- H 1,5	- B10.20	D	- ...	- 3 ~ 230V 50 Hz

Motor voltage 3 ~ 230/400V Δγ 50 Hz, 3 ~ 500V γ 50 Hz,
1 ~ 230V 50 Hz, 1 ~ 110V 60 Hz (single-phase-motor)

Valve mounting

Additional options
- Level gauge
- Level switch
- Temperature switch
- Various means of electrical connection

Design
- For installation in self-made oil tanks: as single pump or cover plate version
- With tank, usable volume V_{usable} 10 l to 75 l

Pump version

Single-circuit pump
- Radial piston pump H or gear pump Z
- Internal gear pump IZ

Dual-circuit pump
- Combinations:
  - Radial piston pump - radial piston pump (HH, only MPN)
  - Radial piston pump - gear pump (HZ)

Basic type, size Type MP (3-phase motor) and MPW (single-phase-motor), sizes 1 and 2 Type MPN (3-phase motor) and MPNW (single-phase-motor), size 4
single-phase-motor, power reduction by 30 ... 50% depending on size

Function

Single stage pump
(radial piston pump, gear pump)

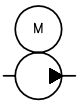

Installation pump

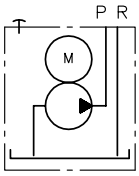

Hydraulic power pack (incl. tank)

Dual stage pump
(radial piston/gear pump,
gear pump/gear pump)

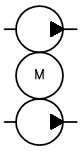

Installation pump

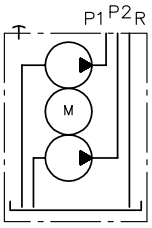

Hydraulic power pack (incl. tank)

Example circuit:

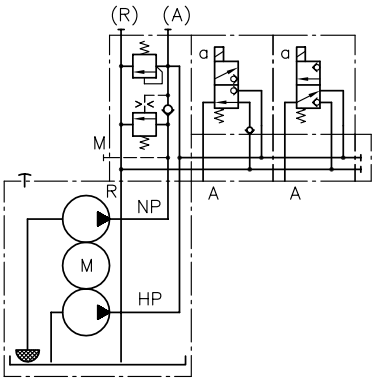

General parameters and dimensions

Single-circuit pump, dual-circuit pump
(without tank)

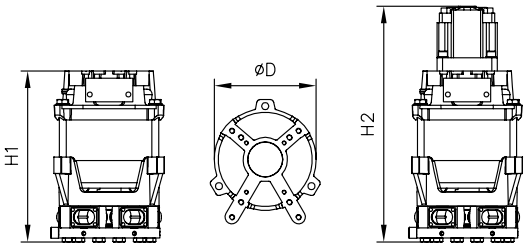

Compact hydraulic power pack
(tank with mounted valves)

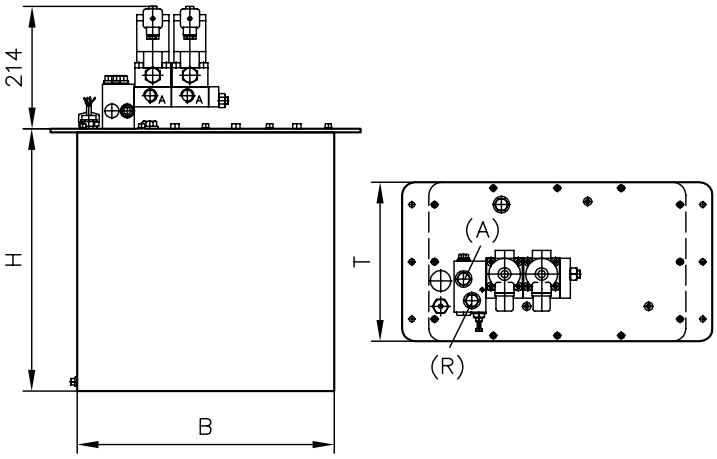

	Radial piston pump (3 cyl.)			Gear pump					Dimensions [mm]		
	Max. pressure	Delivery flow		Max. pressure	Delivery flow						
	p_{max} [bar]	Q_{pu} [lpm] 50 Hz	Q_{pu} [lpm] 60 Hz	p_{max} [bar]	Q_{pu} [lpm] 50 Hz	Q_{pu} [lpm] 60 Hz	P_N [kW]1)	m [kg]2)	H1 2)	$H2_{max}$	ÆD
MP 14	700 - 220	0,27 - 1,07	0,32 - 1,28	150 - 15	0,5 - 6,9	0,6 - 8,29	0,25	5,2/5,0	183/228	249	124
MP 12	700 - 250	0,53 - 2,1	0,64 - 2,52	150 - 60	2 - 6,9	2,4 - 8,28	0,37				
MP 24	700 - 310	0,46 - 1,73	0,55 - 2,08	150 - 35	2 - 12,3	2,4 - 14,76	0,75	9,1/7,7	195/291	322,5	140
MP 22	700 - 260	0,88 - 3,51	1,06 - 4,21	150 - 18	4 - 41,4	4,8 - 49,68	0,55				
MPN 42	700 - 250	2,39 - 7,33	2,87 - 8,8	200 - 60	8,46 - 30,02	10,2 - 36,02	2,1	12,9	251/258	431	
MPN 44	700 - 250	1,53 - 5,37	1,84 - 6,44	200 - 55	5,37 - 25,99	6,4 - 31,19	2,1				
MPN 46	700 - 250	3,16 - 11,12	3,8 - 13,34	200 - 40	12,41 - 71,73	14,89 - 86,08	3,0	18,5	274/281	454	165
MPN 48	700 - 330	2,36 - 4,06	2,83 - 4,87	220 - 60	4,16 - 34,91	4,99 - 41,89	3,0				
MPN 404	700 - 340	3,1 - 3,49	3,7 - 4,19	220 - 45	2,7 - 68,16	2,25 - 81,79	4,2	26,4	298/313	486	

1) The actual power consumption is dependent on the respective operation pressure and can be up to 1.5xP_N
2) Values apply to radial piston pump/gear pump versions

Version with tank:

Size	Tank size	H [mm]	W [mm]	D [mm]
MP 1.	B 3	225	216	136
MP 1., MP 2.	B 5	265	258	160
MP 2., MPN 4.	B 10	358	324	200
MPN 4.	B 25	458	402	250
	B 55	470	560	350
	B 110	495	560	350
	B 25 L	283	623	250
	B 55 L	305	560	350

Example circuit:

MPN 44-Z 8.8-B 10 KT

-AS 1 F 3/160
-BA 2
-NBVP 16 G/R-GM/NZP 16 LZY 5/50-G 8 MA/GM/3-X 84 V-DG 5E-250-1/4
-NBVP 16 G-GM/NZP 16 LZY 5/50-G 8 MA/GM/3-X 84 V-DG 62
-1-G 24
-X 84 V-9/250
-3 x 400/230 V 50 Hz

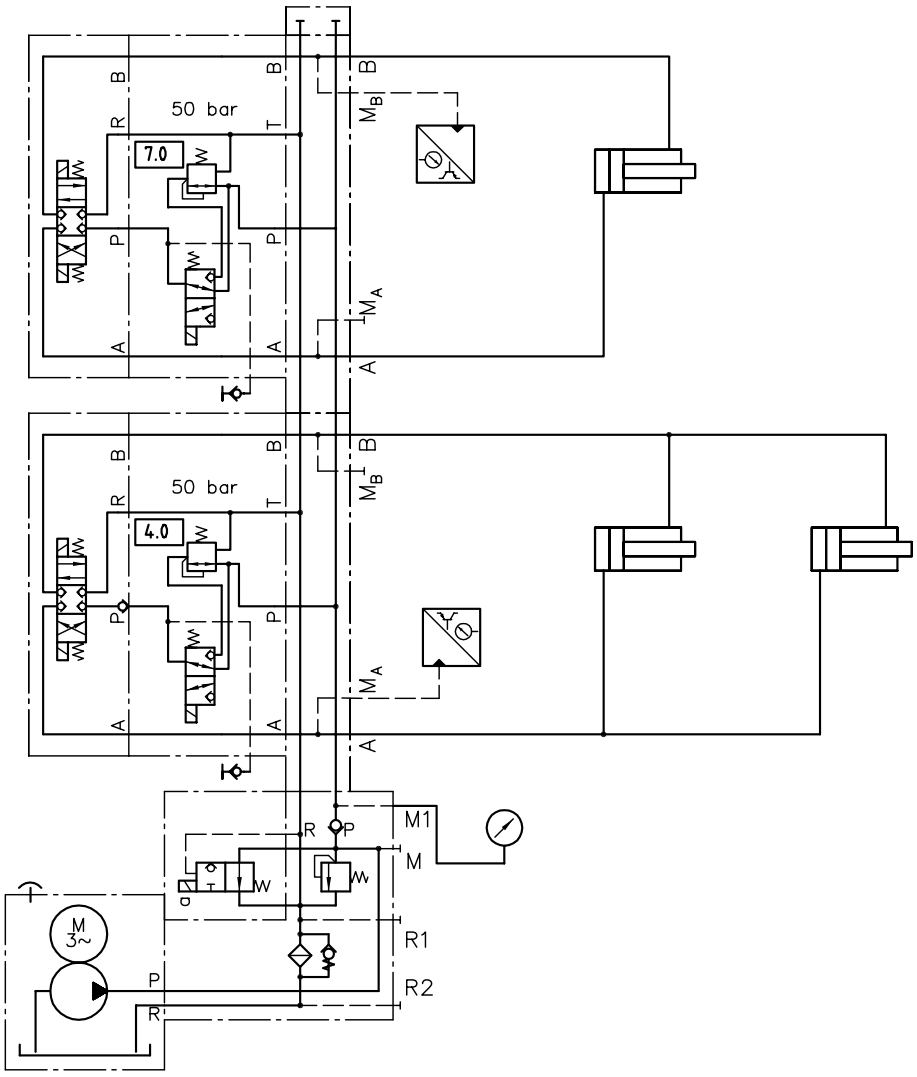

Associated technical data sheets:

- Compact hydraulic power packs type MP, MPW: D 7200, D 7200 H
- Compact hydraulic power pack type MPN and MPNW: D 7207

Connection blocks:

- Types A, B and C: D 6905 A/1, D 6905 B, D 6905 C

Directly mountable valve banks:

- Valve bank (directional seated valve) type VB: D 7302
- Valve bank (directional seated valve) type BWN and BWH: D 7470 B/1
- Types SWR, SWS: D 7451, D 7951
- Valve bank (nominal size 6) type BA: D 7788
- Valve bank (directional seated valve) type BVH: D 7788 BV